ABC 70 / L

INGOMBRI UNITA' IN CONDIZIONI DI TRASPORTO

BARIN SRL - BARIN ITALO PRESIDENT - CITTADELLA (PD) ITALY

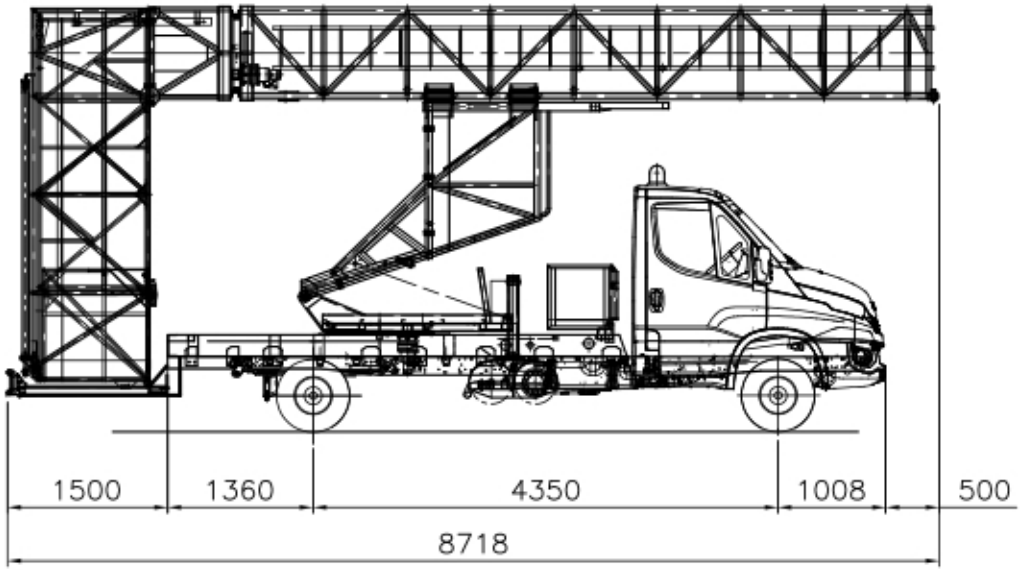

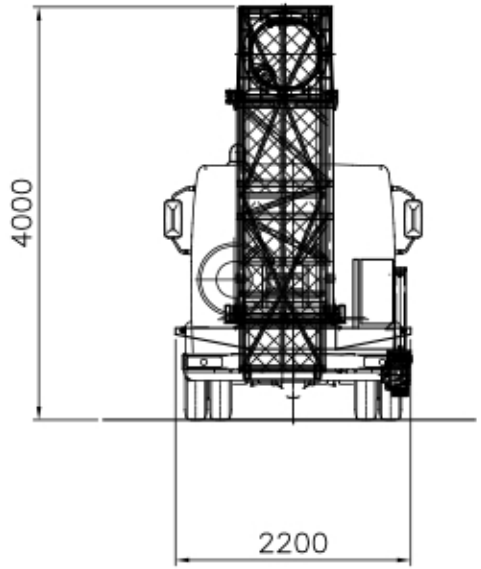

INSTALLATA SU AUTOCARRO

IVECO DAILY 65C 16H3.0 Euro VIE

PESO TOTALE UNITA' : 6.000 Kg

SUBJECT TO SLIGHT MODIFICATIONS

barin	denom.ne GENERAL SCHEME	matr. Italia	dis.n. 14542.0	lav.n.
	compl.vo ABC	data 15/03/2022	scale 1:50
	CAD DWG	rif.dis.n.	dis. L. Simioni	cont. Ing Zuccolo Tristano

— cittadella pd – tel.049/5971300 fax 049/9400229 – http//:www.barin.it E-mail:info@barin.it
even partial is forbidden by law-use and spreading to third parties is forbidden-copyright

FILE:

ABC 70 / L

DIMENSIONI IN POSIZIONE DI LAVORO

LARGHEZZA PIATTAFORMA : 1000 mm

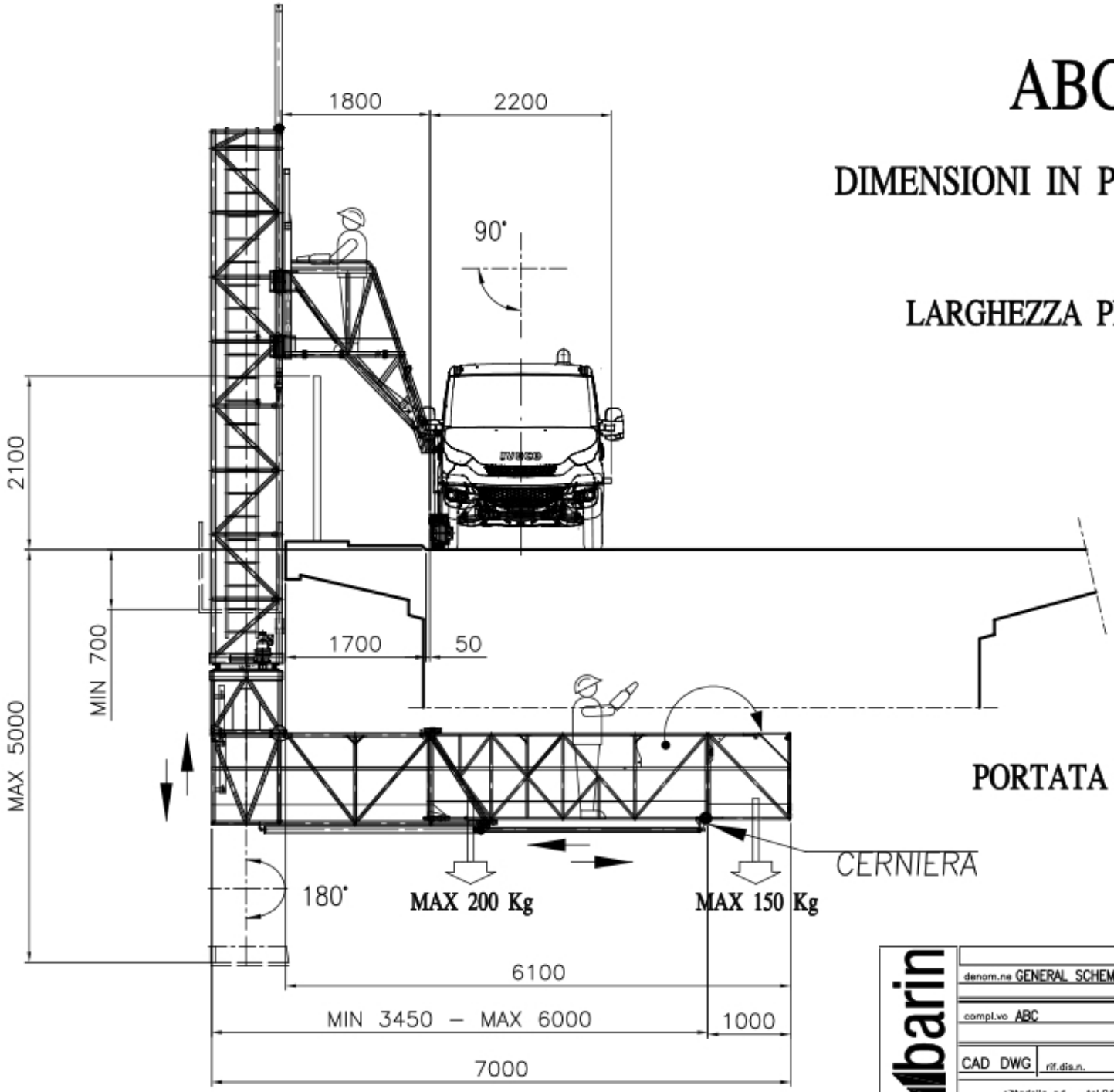

PORTATA IN PIATTAFORMA : 350 Kg

BARIN SRL · BARIN ITALO PRESIDENT · CITTADELLA (PD) ITALY

SUBJECT TO SLIGHT MODIFICATIONS

barin	denom.ne GENERAL SCHEME	matr. Italia	dis.n. 14543.0	lav.n.
	compl.vo ABC	data 15/03/2022	scale 1:50
	CAD DWG	rif.dis.n.	dis. L. Simioni	cont. Ing Zuccolo Tristano

— cittadella pd – tel.049/5971300 fax 049/9400229 – http//:www.barin.it E-mail:info@barin.it
even partial is forbidden by law–use and spreading to third parties is forbidden–copyright

FILE: